This drawing and all information herein is the property of Aus Pits. It must not be copied, made public or used directly, including manufacture of the product shown herein without written approval.
This drawing is loaned subject to these conditions and subject to return on demand.

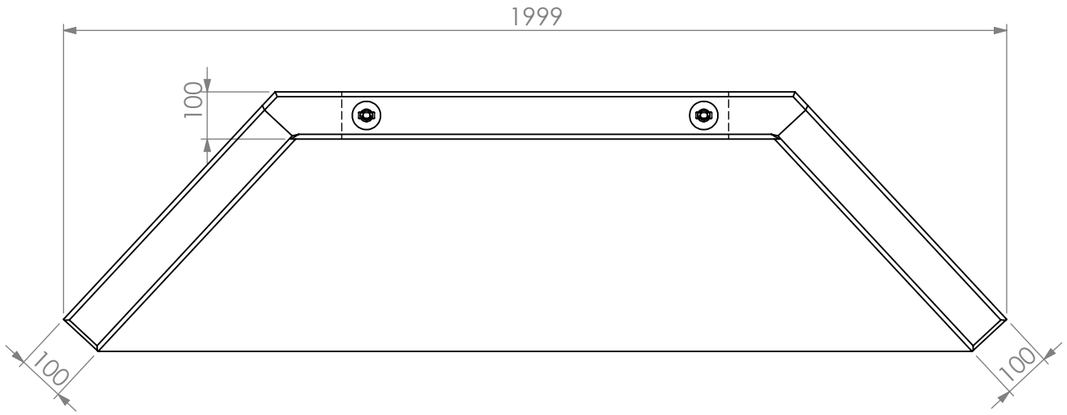

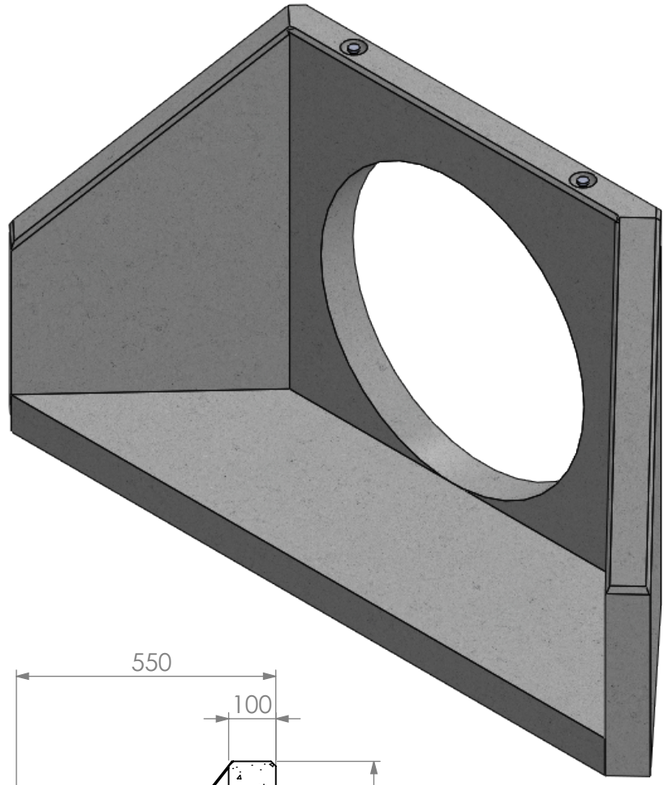

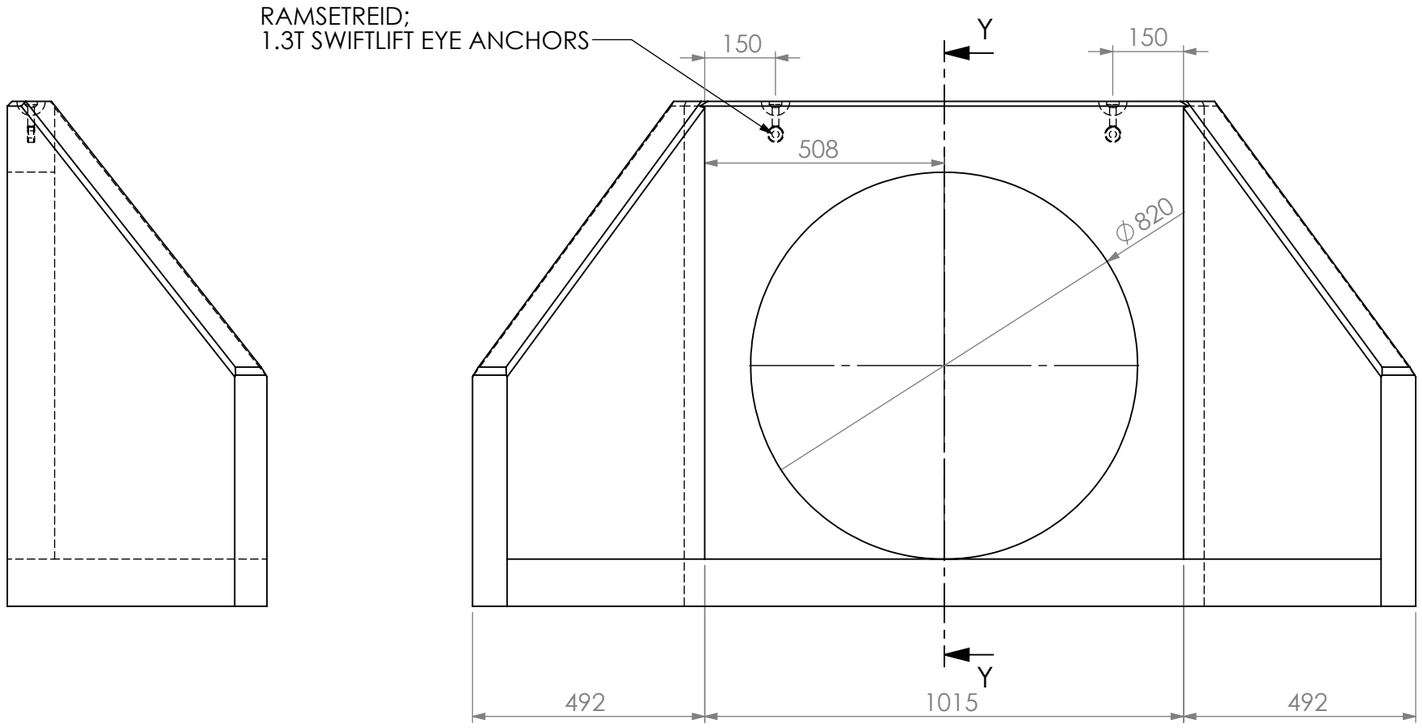

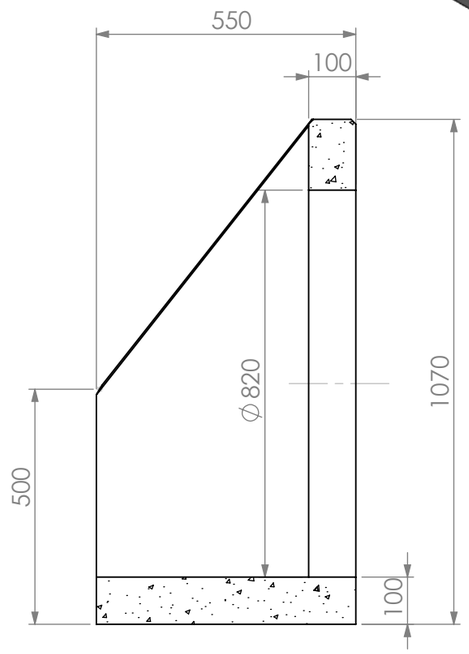

SECTION Y-Y

NOTE
CONCRETE GRADE-50 (50MPa STRENGTH)
CONCRETE WEIGHT: 610 KG

REVISION					
01	08-01-19	RELEASED FOR MANUFACTURE	M.L.	T.S.	
N0	DATE	DESCRIPTION	BY	CKD.	

UNLESS OTHERWISE SPECIFIED:
DIMESIONS ARE IN MILLIMETERS
TOLERANCES:
LINEAR: ±1.00
ANGULAR: ±0.50
DEBUR AND BREAK SHARP EDGES
DO NOT SCALE DRAWING

THIRD ANGLE PROJECTION

Aus Pits

DRAWN	M.L.	PRECAST WINGWALL - 675DIA (MEDIUM UNIT)			
CHK'D	T.S.	PART NO.:	PW675	SCALE: NTS	REVISION
DATE	08-01-19	DWG NO. -		SHEET SIZE: A3	01
				SHEET 1 OF 1	