This drawing and all information herein is the property of Aus Pits. It must not be copied, made public or used directly, including manufacture of the product shown herein without written approval.
This drawing is loaned subject to these conditions and subject to return on demand.

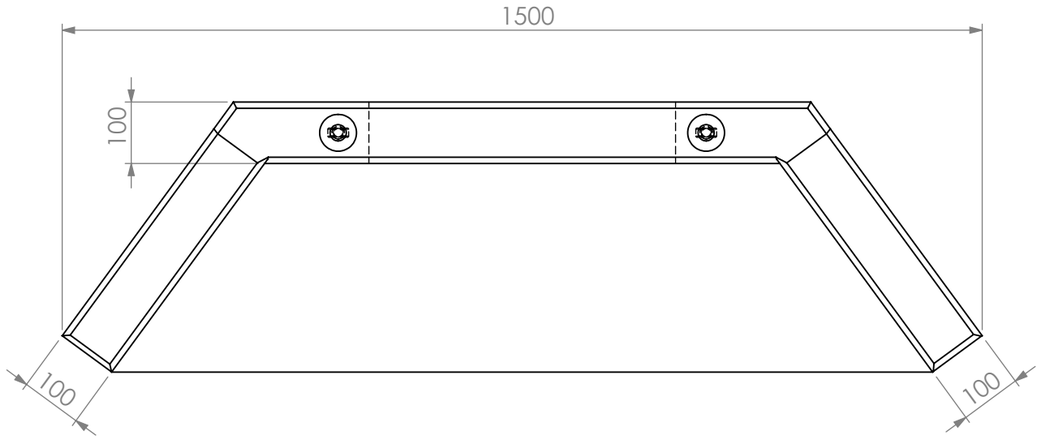


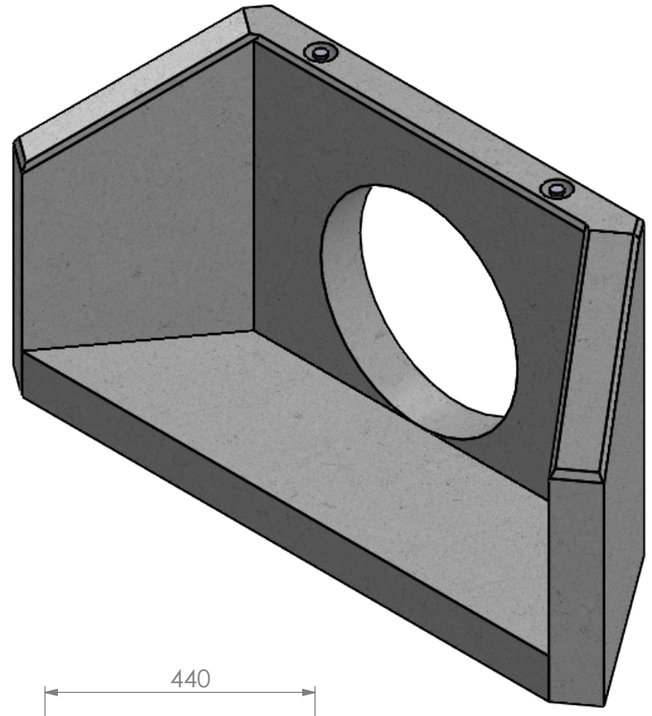

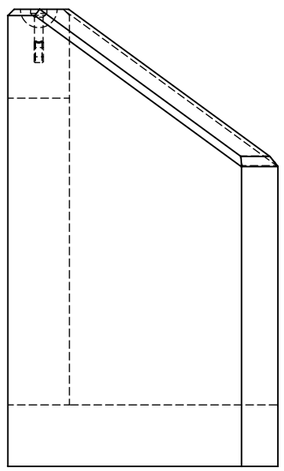

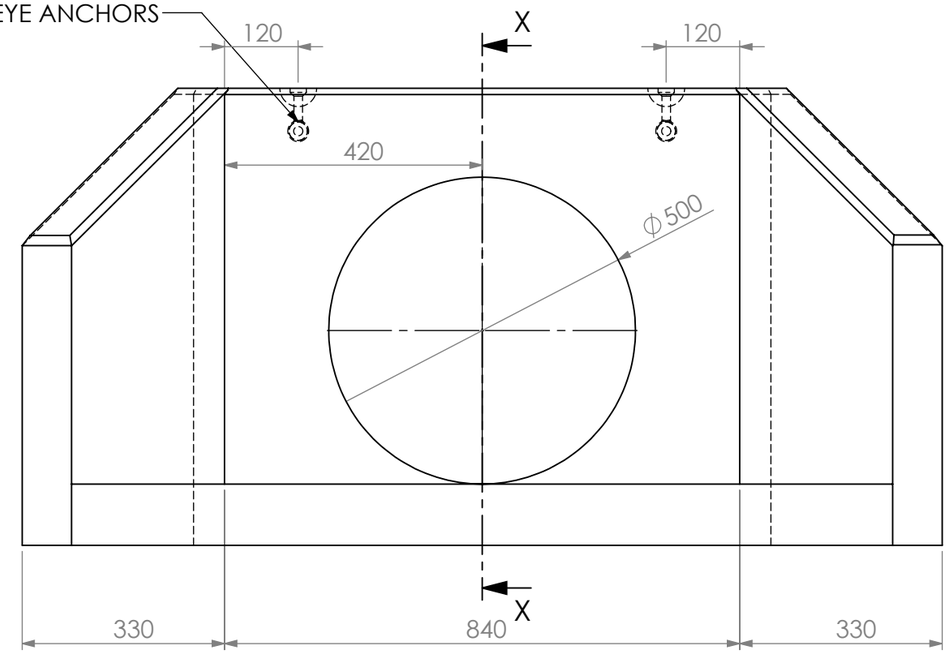


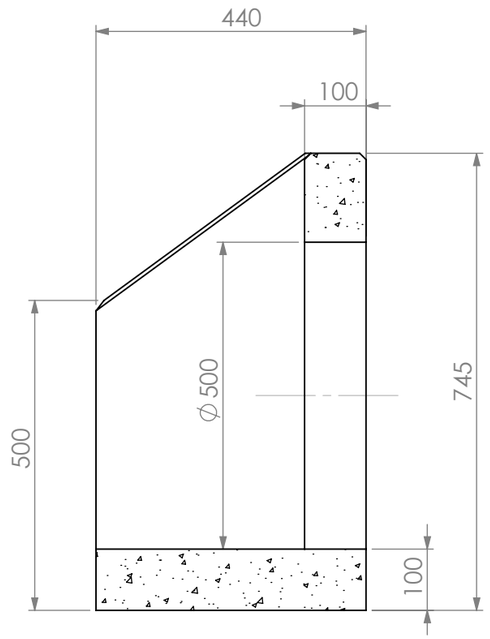


SECTION X-X

NOTE
CONCRETE GRADE-50 (50MPa STRENGTH)
CONCRETE WEIGHT: 380 KG

| REVISION | | | | | |
|---|---|---|---|---|---|
| | | | | | |
| | | | | | |
| | | | | | |
| 01 | 08-01-19 | RELEASED FOR MANUFACTURE | M.L. | T.S. | |
| N0 | DATE | DESCRIPTION | BY | CKD. | |

UNLESS OTHERWISE SPECIFIED:
DIMESIONS ARE IN MILLIMETERS
TOLERANCES:
LINEAR: ±1.00
ANGULAR: ±0.50
DEBUR AND BREAK SHARP EDGES
DO NOT SCALE DRAWING

THIRD ANGLE PROJECTION

Aus Pits

| | | | | | |
|---|---|---|---|---|---|
| DRAWN | M.L. | PRECAST WINGWALL - 375 DIA (SMALL UNIT) | | | |
| CHK'D | T.S. | PART NO.: | PW375 | SCALE: NTS | REVISION |
| DATE | 08-01-19 | DWG NO. - | | SHEET SIZE: A3 | 01 |
| | | | | SHEET 1 OF 1 | |